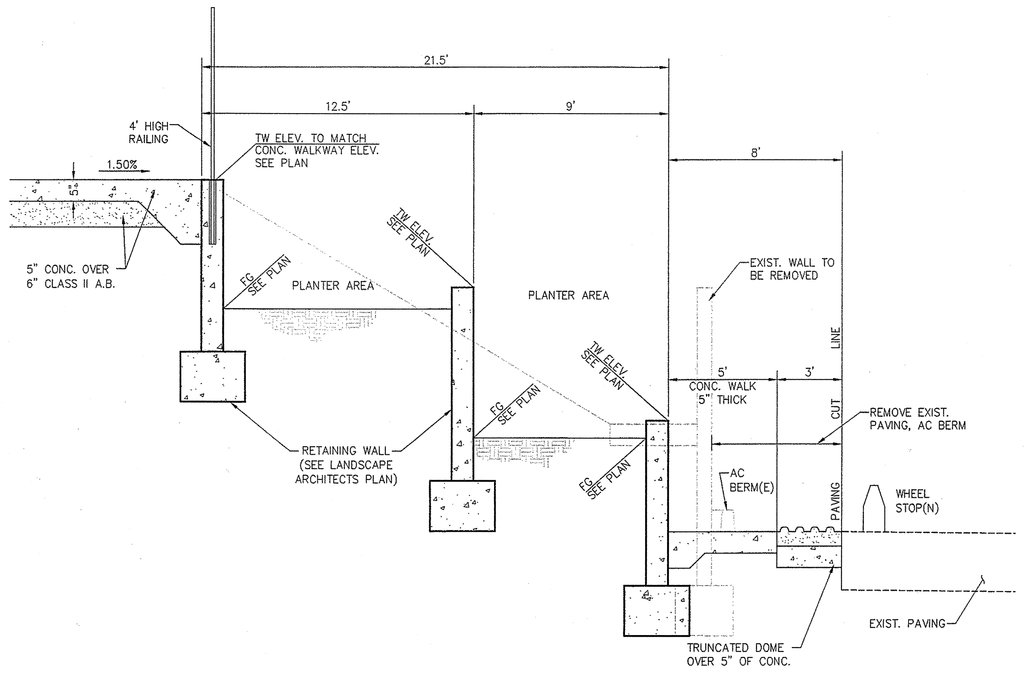

SECTION N.T.S. A

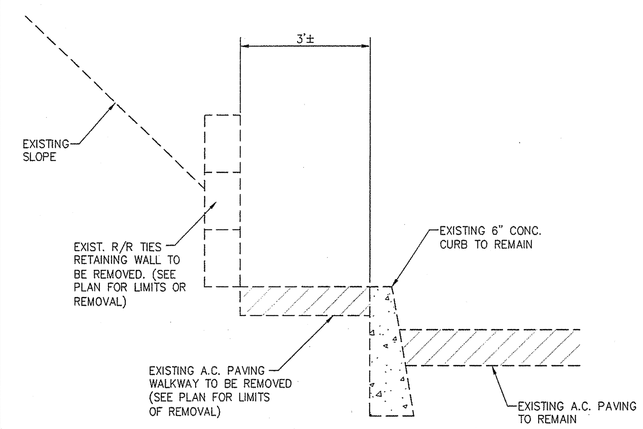

EXISTING CONDITION

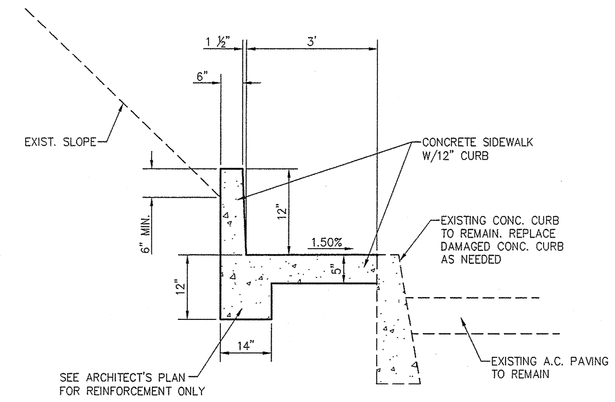

PROPOSED CONDITION

SECTION N.T.S. B

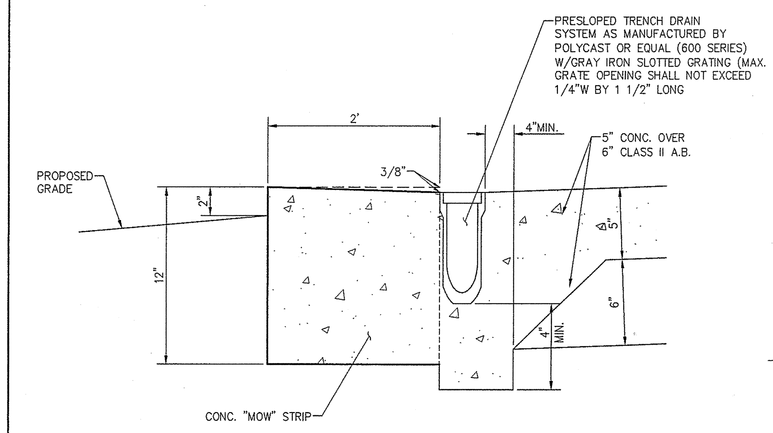

DETAIL N.T.S. C

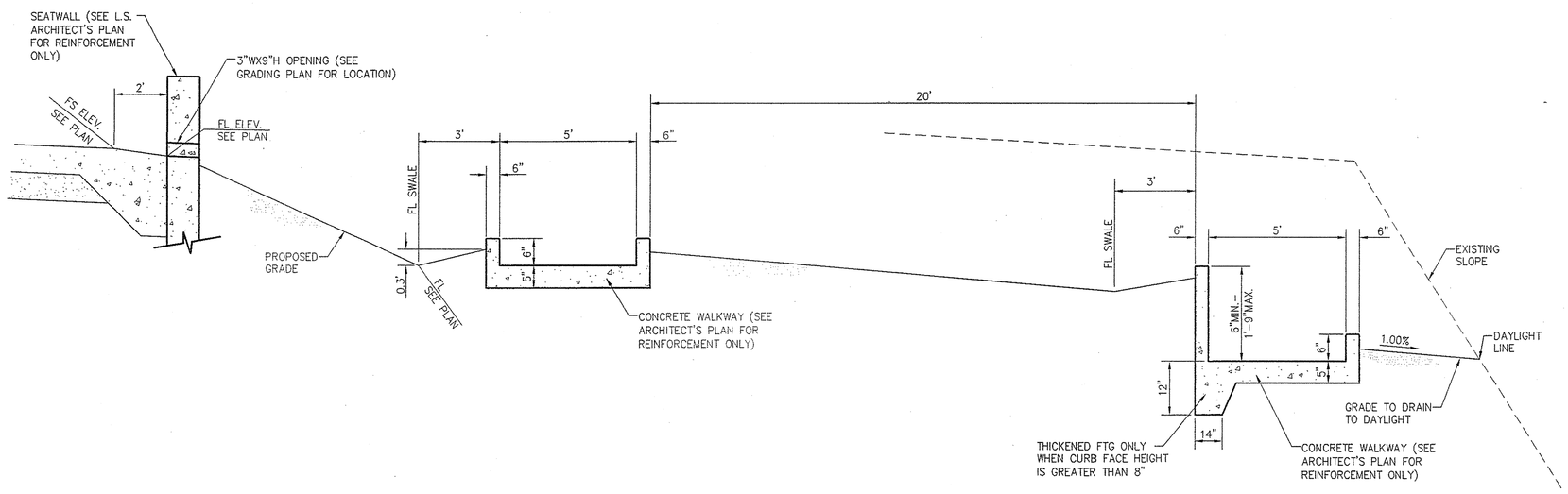

SECTION N.T.S. D

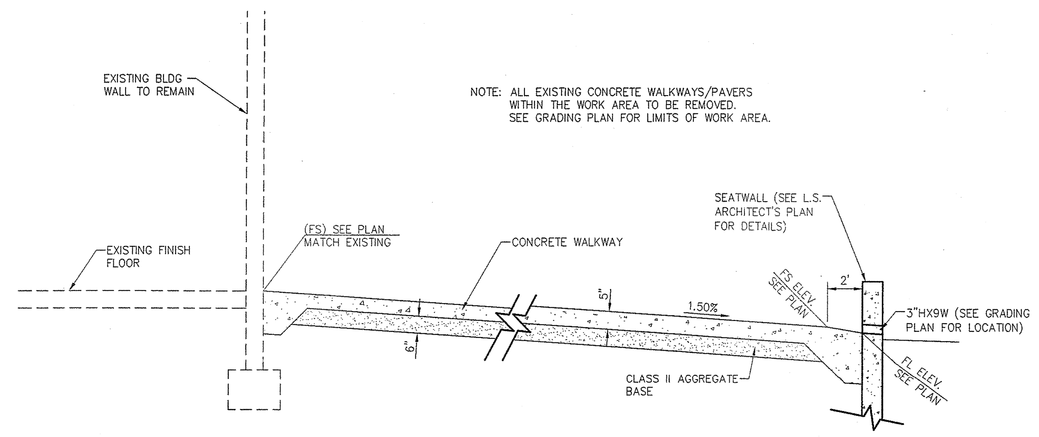

SECTION N.T.S. E

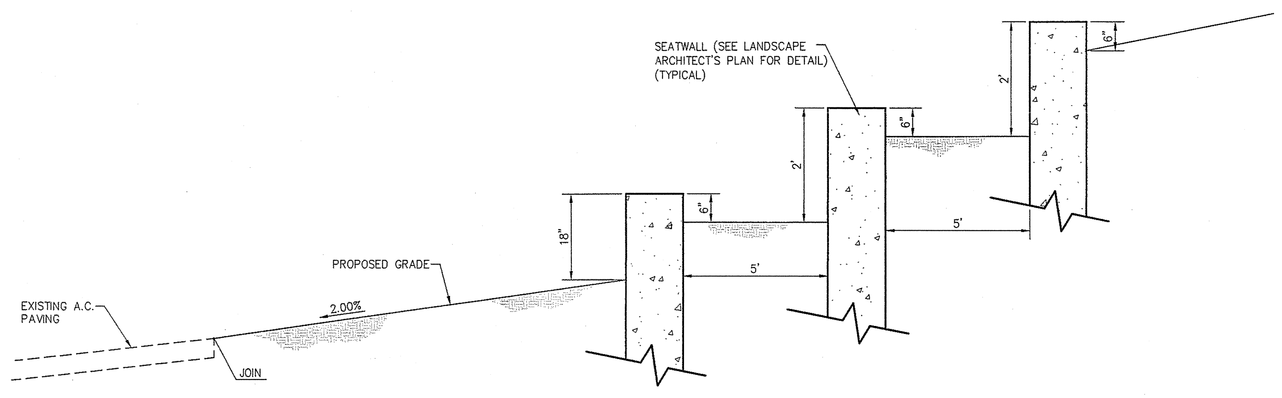

SECTION N.T.S. F

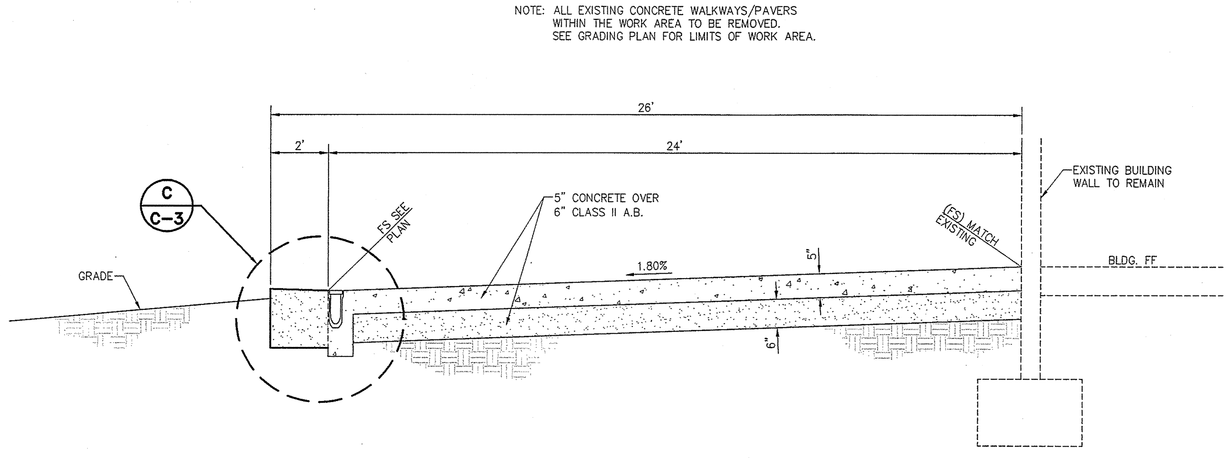

SECTION N.T.S. G

SOUTH ORANGE COUNTY COMMUNITY COLLEGE DISTRICT

2355 Main Street Suite 220
Irvine | CA 92614
949 250 1500
949 955 2708 fax

Architect Seal

gkk

Consultant and Seal

KCT CONSULTANTS, INC.
Civil Engineers - Surveyors - Planners
P.O. Box 5705 Riverside, CA 92517-0705
4344 Latham St., Suite 200, Riverside, CA 92501
Phone: 951-341-8900 Fax: 951-341-8945
e-mail: kctinc@kctconsultants.com

REGISTERED PROFESSIONAL ENGINEER TERESITO N. TABIOLO No. 38826 Exp. 3-31-09 CIVIL STATE OF CALIFORNIA

Agency Approval

VERIFICATION STAMP DIV. OF THE STATE ARCHITECT OFFICE OF REGULATION SERVICES 04 109129 MAY 07 2008

No.	Date	Revision/Issue

DSA SUBMITTAL: NOV. 01, 2007

Project Name

JAMES B. UTT MEMORIAL LIBRARY REMODEL
28000 Marguerite
Mission Viejo, California 92692

Checked By | Drawn By

Sheet Title

SECTIONS & DETAILS

C-3

Project Number 1376-02 | Scale N.T.S.

© 2008 gkkworks, All Rights Reserved
NO PART OF THE CONTENTS OF THIS DOCUMENT MAY BE REPRODUCED OR TRANSMITTED IN ANY FORM OR BY ANY MEANS WITHOUT THE WRITTEN PERMISSION OF GKKWORKS.

OR31777-5697 P1 S2 - R C CONSTRUCTION SERVICES - PG 007 OF 235 (P1 S2) 1 SET.TIF - 2/3/2010 - 15:34
H:\1376\02-SADDLEBACK COLLEGE\Eng\grading\01-GR-03.dwg 05/02/2008