OR831777-51697 P1 S2 - R C CONSTRUCTION SERVICES - PG 005 OF 235 (P1 S2) 1 SET.TIF - 2/3/2010 - 15:34

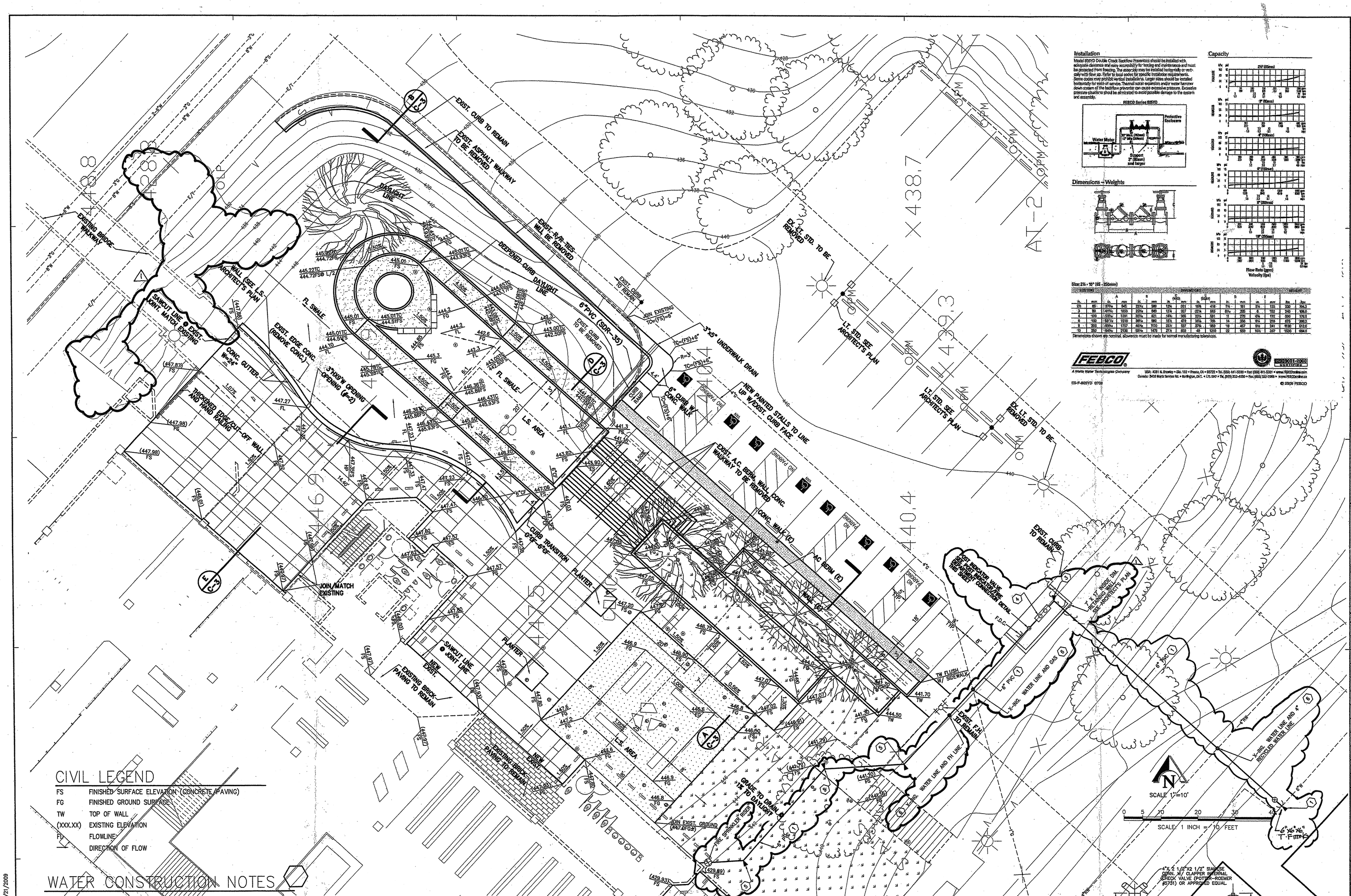

CIVIL LEGEND

FS	FINISHED SURFACE ELEVATION (CONCRETE/PAVING)
FG	FINISHED GROUND SURFACE
TW	TOP OF WALL
(XXX.XX)	EXISTING ELEVATION
FL	FLOWLINE
	DIRECTION OF FLOW

WATER CONSTRUCTION NOTES

1. INSTALL 6-INCH DIA. PVC, CLASS 150 AWWA C-900 WATER LINE WITH 36" COVER PER SECTION 306 OF THE STANDARD SPECIFICATIONS WITH PIPE BEDDING MATERIAL WITH A SAND EQUIVALENT OF NOT LESS THAN 30.
3. INSTALL 6-INCH DUCTILE IRON 90 DEGREE (P.O. BY P.O.) WITH CONCRETE THRUST BLOCK. THRUST BLOCK PER DETAIL "B" THIS SHEET.
4. INSTALL 6-INCH DOUBLE DETECTOR CHECK VALVE AND 6-INCH P.I.V. AND 4-INCH FDC PER DETAIL HEREON. (FEBCO SERIES 805YD, SIZE = 6") SEE DETAIL THIS SHEET.
5. INSTALL 6-INCH DUCTILE IRON 45 DEGREE (P.O. BY P.O.) WITH CONCRETE THRUST BLOCK. THRUST BLOCK PER DETAIL "B" THIS SHEET.
6. NEW 6" PVC WATER LINE TO GO UNDER THE EXISTING UTILITY (UTILITY NAME NOTED ON PLAN) IF COVER IS LESS THAN 36". SEPARATION BETWEEN THE NEW PIPE AND THE UTILITY IS 6" MIN.

THRUST BLOCK NOTES:
1. BEARING SURFACES SHOWN IN TABLE ARE MINIMUMS.
2. TABLE IS BASED ON 150 PSI INTERNAL PIPE PRESSURE PLUS WATER HAMMER.
   4", 6", AND 12" WATER HAMMER = 110 PSI
   16", 20", AND 24" WATER HAMMER = 70 PSI
3. TABLE IS BASED ON 1,500 P.S.F. SOIL BEARING CAPACITY.

MINIMUM BEARING SURFACE AREA FOR THRUST BLOCK
(IN SQUARE FEET)

SIZE OF MAIN	HORIZONTAL BENDS				TEE OR DEAD END PLUG
	11-1/4°	22-1/2°	45°	90°	
4"	0.0	1.00	1.00	2.50	1.50
6"	0.0	1.25	2.25	5.00	3.00
8"	0.0	2.00	4.00	8.00	5.25
12"	2.25	4.50	8.75	16.25	11.25
16"	3.75	7.50	15.50	28.5	20.1
20"	5.00	12.5	24.0	44.5	31.4
24"	7.00	17.8	34.6	64.0	45.2

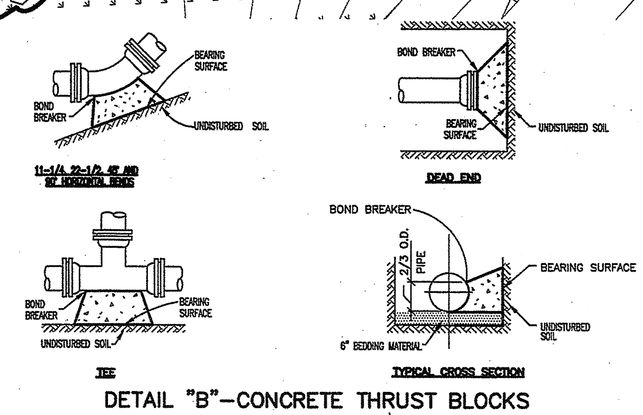

DETAIL "B"-CONCRETE THRUST BLOCKS

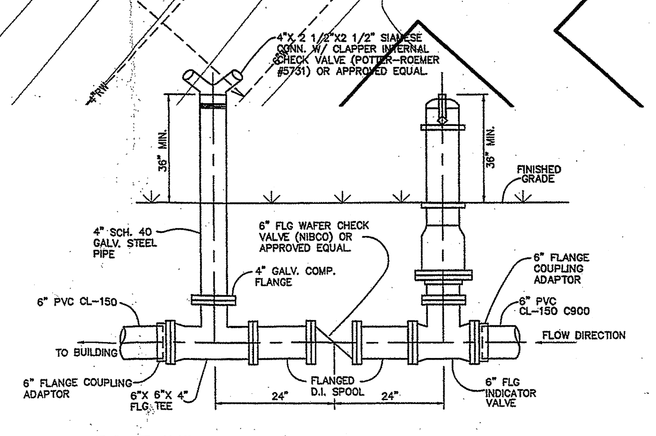

POST INDICATOR/FIRE DEPT. CONNECTION DETAIL
N.T.S.

Installation

Model 805YD Double Check Backflow Preventers should be installed with adequate clearance and easy accessibility for testing and maintenance and must be protected from freezing. The assembly may be installed horizontally or vertically with flow up. Refer to local codes for specific installation requirements. Some codes may prohibit vertical installations. Larger sizes should be installed horizontally for ease of service. Thermal water expansion and/or water hammer down stream of the backflow preventer can cause excessive pressure. Excessive pressure situations should be alleviated to avoid possible damage to the system and assembly.

FEBCO Series 805YD

Dimensions – Weights

Capacity

Size: 2½ • 10" (65 - 250mm)

Size		A		B		C		D		E		Weight	
				Closed		Open							
in.	mm	in.	mm	in.	mm	in.	mm	in.	mm	in.	mm	lbs.	kgs.
2½	65	27½	540	27½	690	18¾	476	7½	191	5¼	133	52	24.0
3	80	14¾	1003	29¾	756	13½	337	22¾	580	8¼	209	6	152	240	108.0
4	100	15¾	1351	30¾	781	15¼	387	22¾	580	7	178	6¼	159	320	176.0
6	150	19¾	1519	36¾	930	18¼	463	30¾	785	11	279	8¼	210	670	306.0
8	200	26¾	1707	46¾	1210	25¾	654	37¾	958	15	457	9¾	248	1100	513.0
10	250	34¾	2436	58¾	1475	27¾	692	49	1219	20	508	10¾	267	1530	694.0

Dimensions shown are nominal, allowance must be made for normal manufacturing tolerances.

FEBCO®
A Watts Water Technologies Company
USA: 4301 N. Brackett • Ste. 102 • Fresno, CA • 93723 • Tel. (559) 441-3200 • Fax: (559) 441-3201 • www.febcousa.com
Canada: 3435 North Service Rd. • Burlington, ON L. • L7N 3W7 • Tel. (905) 332-4090 • Fax (905) 332-7068 • www.febcocanada.com
ISO 9001:2000 CERTIFIED
SS-F-805YD 0709
© 2009 FEBCO

SOUTH ORANGE COUNTY COMMUNITY COLLEGE DISTRICT

gkkworks
2355 Main Street Suite 220
Irvine | CA 92614
949 250 1500
949 955 2708 fax

Architect Seal

RECEIVED NOV 30 2009 DSA - SAN DIEGO

Consultant and Seal

KCT CONSULTANTS, INC.
Civil Engineers - Surveyors - Planners
P.O. Box 6705 Riverside, CA 92517-6705
4344 Latham St., Suite 200, Riverside, CA 92501
Phone: 951-341-8840 Fax: 951-341-8845
e-mail: kctinc@kctconsultants.com

REGISTERED PROFESSIONAL ENGINEER — TERESITO N. TABIOLO — RCE No. 38826 — Exp. 3-31-11 — CIVIL — STATE OF CALIFORNIA — 8-20-09

Agency Approval

No.	Date	Revision/Issue
1	8-27-09	ADDENDUM #2

APPROVED
DIVISION OF THE STATE ARCHITECT
ACS FLS EV SSS TB
A# 04-109129 DATE 1410
(ADDENDUM #2 DRAWINGS:)
C-1 P2.01 P2.05
A1.0 P2.02 P2.09

DSA SUBMITTAL: NOV. 01, 2007

Project Name

JAMES B. UTT MEMORIAL LIBRARY REMODEL
28000 Marguerite
Mission Viejo, California 92692

Checked By | Drawn By

Sheet Title

PRECISE GRADING AND WATER LINE CONNECTION

C-1

Project Number 1376-02 | Scale 1" = 10'

© 2009 gkkworks, All Rights Reserved
NO PART OF THE CONTENTS OF THIS DOCUMENT MAY BE REPRODUCED OR TRANSMITTED IN ANY FORM OR BY ANY MEANS WITHOUT THE WRITTEN PERMISSION OF GKKWORKS.

H:\1376\02-SADDLEBACK COLLEGE\Eng\grading\01-GR-01.dwg 08/21/2009